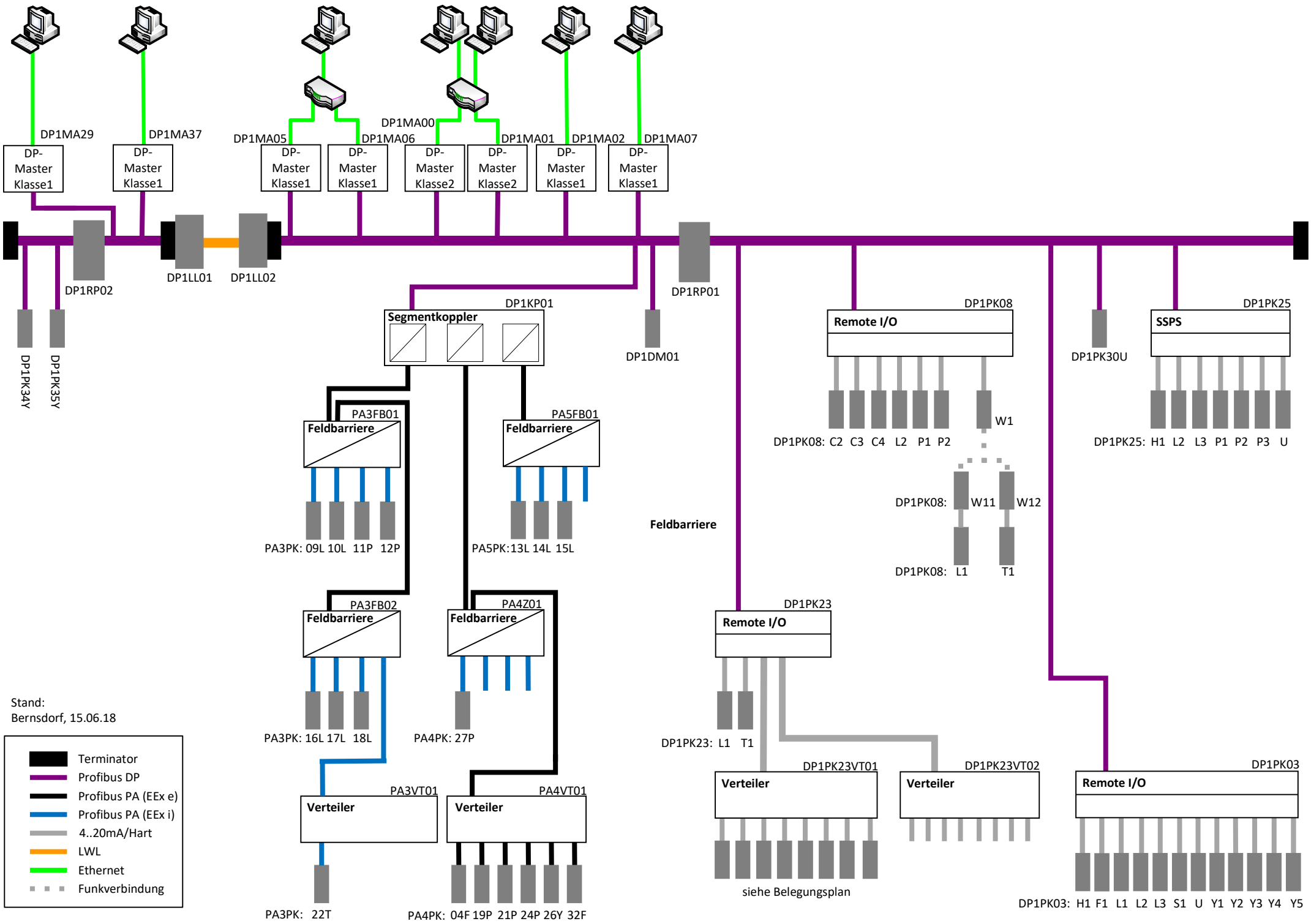
DP1MA29
DP1MA37
DP1MA05
DP1MA06
DP1MA00
DP1MA01
DP1MA02
DP1MA07
DP-Master Klasse1
DP-Master Klasse1
DP-Master Klasse1
DP-Master Klasse1
DP-Master Klasse2
DP-Master Klasse2
DP-Master Klasse1
DP-Master Klasse1
DP1RP02
DP1LL01
DP1LL02
DP1RP01
DP1PK34Y
DP1PK35Y
DP1KP01
Segmentkoppler
DP1DM01
DP1PK08
Remote I/O
DP1PK08: C2 C3 C4 L2 P1 P2
W1
DP1PK08: W11 W12
DP1PK08: L1 T1
DP1PK30U
DP1PK25
SSPS
DP1PK25: H1 L2 L3 P1 P2 P3 U
PA3FB01
Feldbarriere
PA3PK: 09L 10L 11P 12P
PA5FB01
Feldbarriere
PA5PK:13L 14L 15L
Feldbarriere
PA3FB02
Feldbarriere
PA3PK: 16L 17L 18L
PA4Z01
Feldbarriere
PA4PK: 27P
DP1PK23
Remote I/O
DP1PK23: L1 T1
DP1PK23VT01
Verteiler
siehe Belegungsplan
DP1PK23VT02
Verteiler
DP1PK03
Remote I/O
DP1PK03: H1 F1 L1 L2 L3 S1 U Y1 Y2 Y3 Y4 Y5
PA3VT01
Verteiler
PA3PK: 22T
PA4VT01
Verteiler
PA4PK: 04F 19P 21P 24P 26Y 32F
Stand:
Bernsdorf, 15.06.18
Terminator
Profibus DP
Profibus PA (EEx e)
Profibus PA (EEx i)
4..20mA/Hart
LWL
Ethernet
Funkverbindung